BIOLOGY CENTRE CAS

Přírodovědecká fakulta
Faculty of Science

Jihočeská univerzita v Českých Budějovicích
University of South Bohemia in České Budějovice

Bayerisch-Tschechische Hochschulagentur
Česko-bavorská vysokoškolská agentura

LMU LUDWIG-MAXIMILIANS-UNIVERSITÄT MÜNCHEN

Palaeontology & Geobiology LMU Munich
GeoBio-Center LMU Munich

Kontakt • *Contact*

Prof. Dr. William D. Orsi (w.orsi@lrz.uni-muenchen.de)
Dr. Travis Meador (travis.meador@bc.cas.cz)

Investigating the ecology of marine archaea using stable isotope probing

Introduction to Bavarian-Czech cooperation

Soils and sediments store large inventories of organic carbon (C) and nutrients, thereby functioning as important environmental reactors in the global C cycle and a major nutrient source for plants. In the context of changing climate and human activity, understanding the processes and pathways of soil C allocation and decay continue to be the subject of intense study, with particular attention devoted to the microbial drivers of respiration. One relatively new approach for exploring these complex metabolic and environmental systems is via stable isotope probing (SIP), which traces enriched ratios of 13/12C or 2/1H atoms embedded in model compounds through the ecosystem. William Orsi (LMU, Munich) and Travis Meador (Biology Center CAS, U. South Bohemia, Budweis, CZ) lead pioneering research programs that employ this technology through the complementary lenses of molecular genetics and lipidomics. The proposed research collaboration "Stable Isotope Probing in Bavaria and Bohemia" (SIP B&B) unites their research efforts by (i) establishing fluid and routine communication protocols, (ii) activating BSc and MSc student projects that aim to extend experimental approaches that explore life in the deep biosphere, and (iii) building research questions and hypotheses that will culminate in the submission of an International Project proposal of the DFG and Czech Science Foundation in April 2021.

The Microbial Biomarker Tree of Life

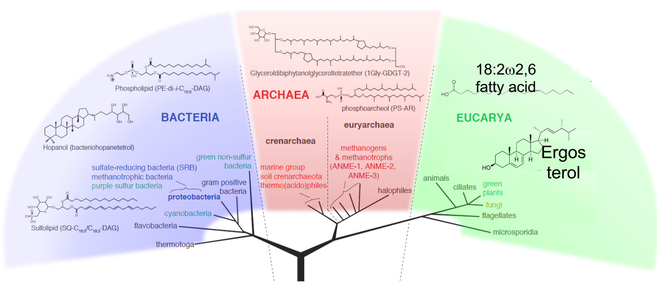

Phylogenetic assignment of example bacterial fatty acids (blue), archaeal isoprenoidal lipids (red), and fungal lipid biomarkers (green) that are amenable analysis by gas chromatography isotope ration mass spectrometry (GC-IRMS).

Preliminary results from the Bavarian-Czech cooperation

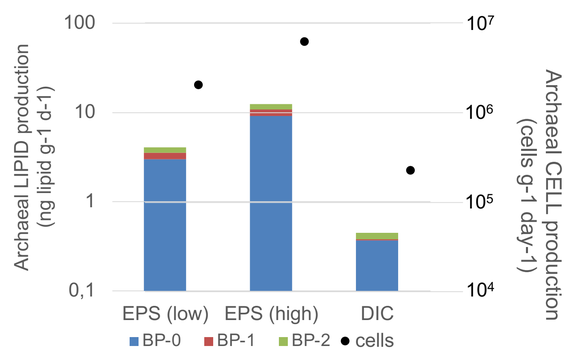

Production of archaeal lipids and cell biomass from 13C-labeling using labeled EPS and DIC were quantified in incubations of Namibian subseafloor sediments.

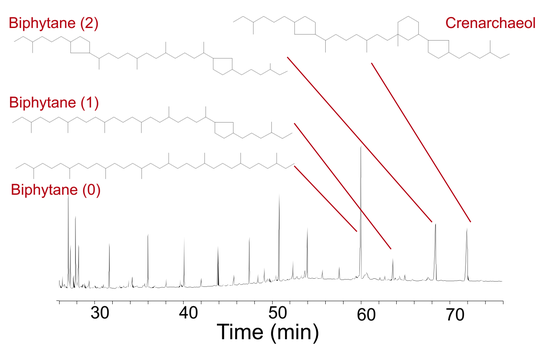

Lipid analysis has revealed the presence of four key archaeal lipids: bipythane-0, biphytane-1, biphytane-2, and crenarchaeol. These lipids appear to be highly abundant in the samples which speaks to a high activity and growth of archaea in the subseafloor sediments.

Objectives

Communication between the Orsi and Meador research groups will be vital to focus the exchange of knowledge, proposed research activities, and parallel research questions into innovative breakthroughs in the field of stable isotope biogeochemistry. Objective 1 will therefore be to establish intelligent solutions and secure connection tools to engage discussion during SIP B&B bi-monthly group meetings. The collaboration technology will promote Objective 2, to design Bachelor's & Master's student projects that harvest recent research advances achieved by both groups in their exploration of the exotic clade of microorganisms called Lokiarchaeota, whose taxonomic identity falls at the intersection of the three known domains of life (Archaea, Bacteria, and Eurkarya). On the basis of a recent work describing lokiarchaeotal metabolism (Orsi et al., 2020) and archaeal lipidomics in aquatic sediments (Meador et al., 2015), the SIP B&B MSc project will seek to provide unequivocal evidence of a novel lipid biomarker produced by these unique organisms, which will promote new hypotheses to consolidate the international partnership. Furthermore, we aim to present the initial findings of the SIP B&B collaboration at the inaugural meeting of the Czech Society for Stable Isotopes in December 2020. The results and knowledge obtained from these pilot MSc experiments will strengthen SIP B&B research approaches and culminate in a long term partnership to explore our mutual interests and aspirations.

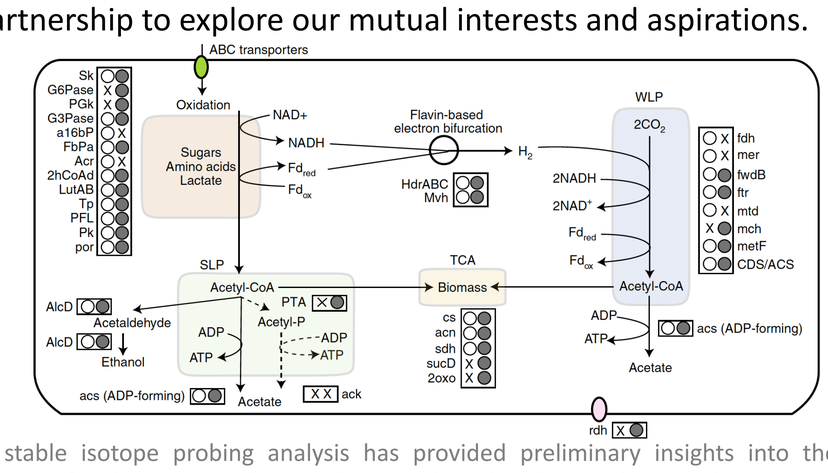

Genetic and stable isotope probing analysis has provided preliminary insights into the metabolism of a subseafloor group of archaea in Namibian sediments, the Lokiarchaeota (Orsi et al., 2020 Nature Microbiology)

Preliminary results

We have investigated the stable isotope labeling of archael lipids in 13C incubations performed from Namibian subseafloor sediments (see photos in lower right). The preliminary results are encouraging, they reveal that archaea have assimilated the 13C added substrates and allow us to estimate their biomass production rates and growth. We could detect four key lipids from archaea, namely biphytane-0, biphytane-1, bipythane-2, and crenarchaeol. Interestingly, the growth of the archaea based on the stable isotope lipid analysis appears to be based more on the utilization of extracellular polymeric substances (EPS) compared to the fixation of dissolved inorganic carbon (DIC) via carbon fixation pathways. This suggests that heterotrophy is a more important metabolic feature of many of these subseafloor archaea, compared to autotrophy. However, DIC was incorporated into the archaeal lipids indicating that they use both organic and inorganic substrates for their growth and proliferation in the anoxic sediments (see photos in lower right). These results support the preliminary results based on DNA stable isotope probing and gene expression from the same sediment core, which indicated that one group of archaea, the Lokiarchaeota, uses both EPS and DIC as carbon sources for a mixotrophic lifestyle (see figure above). The complimentary lipid analysis provides strong support for these genetic analysis and will continue to be integrated as our project and collaborations continue. We anticipate at least one publication from our collaboration to be produced.

The sediment core collected from offshore of Namibia which has been studied in this project.

Characterization of research teams

Stable isotope probing research at the Biology Center Czech Academy of Sciences (BC-CAS) comprises 8 scientists and technicians, a stable isotope facility equipped for analyses of solids, liquids, gases, and molecular biomarkers, and an anaerobic microbiology laboratory that supports anaerobic cultivations, microbiome and metagenome analysis, including an extraction facility for environmental DNA and RNA.

Photo of LMU collaboration partner W. Orsi

From left: Birgit Bogner (Bachelor's student), Stanislav Jabinski (PhD student), Travis Meador (PI), Biology Centre CAS, České Budějovice, CZ

Bayerisches Staatsministerium der Finanzen und für Heimat

Das Projekt wurde durch die Bayerisch-Tschechische Hochschulagentur aus Mitteln des Bayerischen Staatsministeriums der Finanzen und für Heimat gefördert.
Tento projekt byl podpořen Česko-bavorskou vysokoškolskou agenturou z prostředků Bavorského ministerstva financí a vlasti.

www.btha.de